DON-JO MFG., INC.

Round & Flat Door Pulls

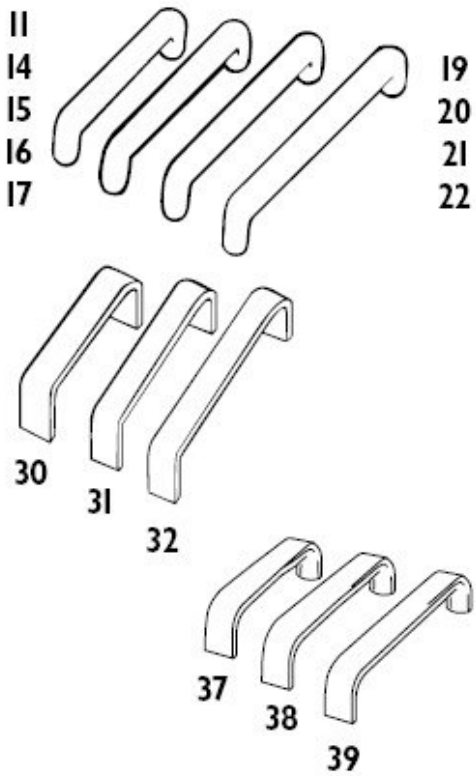

NUMBER	CTC	DIAMETER	ANSI	DIMENSIONS
11	5 1/2"	5/8"	J401	6 1/8" x 2" x 1 3/8"
14	5 1/2"	3/4"	J401	6 1/4" x 2 1/4" x 1 1/2"
15	6"	3/4"	J401	6 3/4" x 2 1/4" x 1 1/2"
16	8"	3/4"	J401	8 3/4" x 2 1/4" x 1 1/2"
17	10"	3/4"	J401	10 3/4" x 2 1/4" x 1 1/2"
19	8"	1"	J401	9" x 3" x 2"
20	10"	1"	J401	11" x 3" x 2"
21	12"	1"	J401	13" x 3" x 2"
22	18"	1"	J401	19" x 3" x 2"
30	6"	3/8" x 1 1/4"	J401	6 3/8" x 2" x 1 5/8"
31	8"	3/8" x 1 1/4"	J401	8 3/4" x 2" x 1 5/8"
32	10"	3/8" x 1 1/4"	J401	10 3/8" x 2" x 1 5/8"
37	6"	1" Half Round	J401	6 1/2" x 2" x 1 1/2"
38	8"	1" Half Round	J401	8 1/2" x 2" x 1 1/2"
39	10"	1" Half Round	J401	10 1/2" x 2" x 1 1/2"

SHELF PACK: 1 • **Dimensions - Overall x Projection x Clearance**

FINISHES: (11, 14, 15, 16, 17, 19, 20, 21, 22) **605, 606, 612, 613, 628, 629, 630**
(30, 31, 32, 37, 38, 39) **605, 613, 628, 630**

- **For 2 1/2" clearance add prefix "H" – N/A on models 30 - 39**
- **Made from solid bar stock**

Pull Plates

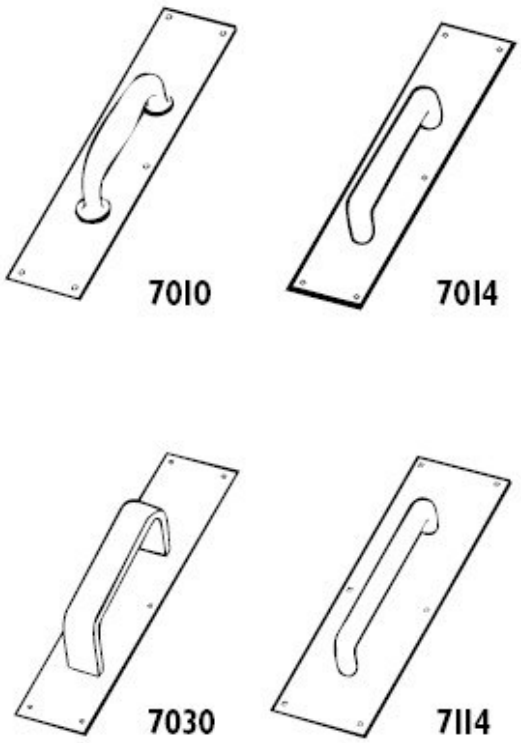

Order On-line:
http://www.mrlock.com

NUMBER	CTC	PULL	ANSI	DIMENSIONS
7010*	5 1/2"	6 5/8"x1 3/4"x1 15/16"	J405	3 1/2" x 15"
7011	5 1/2"	5/8"	J405	3 1/2" x 15"
7014	5 1/2"	3/4"	J405	3 1/2" x 15"
7015	6"	3/4"	J405	3 1/2" x 15"
7016	8"	3/4"	J405	3 1/2" x 15"
7030	6"	3/8" x 1 1/4"	J405	3 1/2" x 15"
7031	8"	3/8" x 1 1/4"	J405	3 1/2" x 15"
7110*	5 1/2"	6 5/8"x1 3/4"x1 15/16"	J405	4" x 16"
7111	5 1/2"	5/8"	J405	4" x 16"
7114	5 1/2"	3/4"	J405	4" x 16"
7115	6"	3/4"	J405	4" x 16"
7116	8"	3/4"	J405	4" x 16"
7130	6"	3/8" x 1 1/4"	J405	4" x 16"
7131	8"	3/8" x 1 1/4"	J405	4" x 16"
7210*	5 1/2"	6 5/8"x1 3/4"x1 15/16"	J405	6" x 16"
7310*	5 1/2"	6 5/8"x1 3/4"x1 15/16"	J405	8" x 16"

SHELF PACK: 1

FINISHES: 605, 606, 612, 613, 628, 629, 630, *not available in 606

- **For 2 1/2" clearance add prefix "H" (not available on all models)**
- **First two digits indicate plate size, second two digits indicate pull style**
- **Other sizes and combinations available. Contact factory**